Johnny's Single Wheel Hoe
Assembly & Use

80050

955 Benton Ave., Winslow, ME 04901 • Phone: 1-877-564-6697 • Fax: 1-800-738-6314
Email: service@johnnyseeds.com • Website: Johnnyseeds.com

Components and Parts:

Single Wheel Hoe Parts List				
Item	**Description**	**Size**	**Compatible Wrench**	**Quantity**
A	Multitool Bolt Tightener			1
B	Lower Handle Bar			2
C	Upper Handle Bar			2
D	Mid-handle Bracket			1
E	Handle Spacers			3
F	Wheel Supports			2
G	Handle Attachment Brackets			2
H	Wheel			1
I	Toolbar Holder			1
J	Rubber Handle Grips			2
K	Mid-handle Bracket Bolts	M8x110	13mm	3
L	Hex Lock Nuts	M8	13mm	10
M	Wheel Nuts	M8	13mm	2
N	Adjustment Tool Wing Nut	M8		1
O	Wheel Support Spacers			2
P	Washers	M8		21
Q	Butterfly Screw			1
R	Adjustment Tool Bolt	M8x45	13mm	1
S	Toolbar Holder Bolt	M8x30	13mm	4
T	Wheel Bracket Bolt	M8x70	13mm	1
U	Handle Attachment Bolts	M8x80	13mm	2
V	Toolbar Holder Plate			1

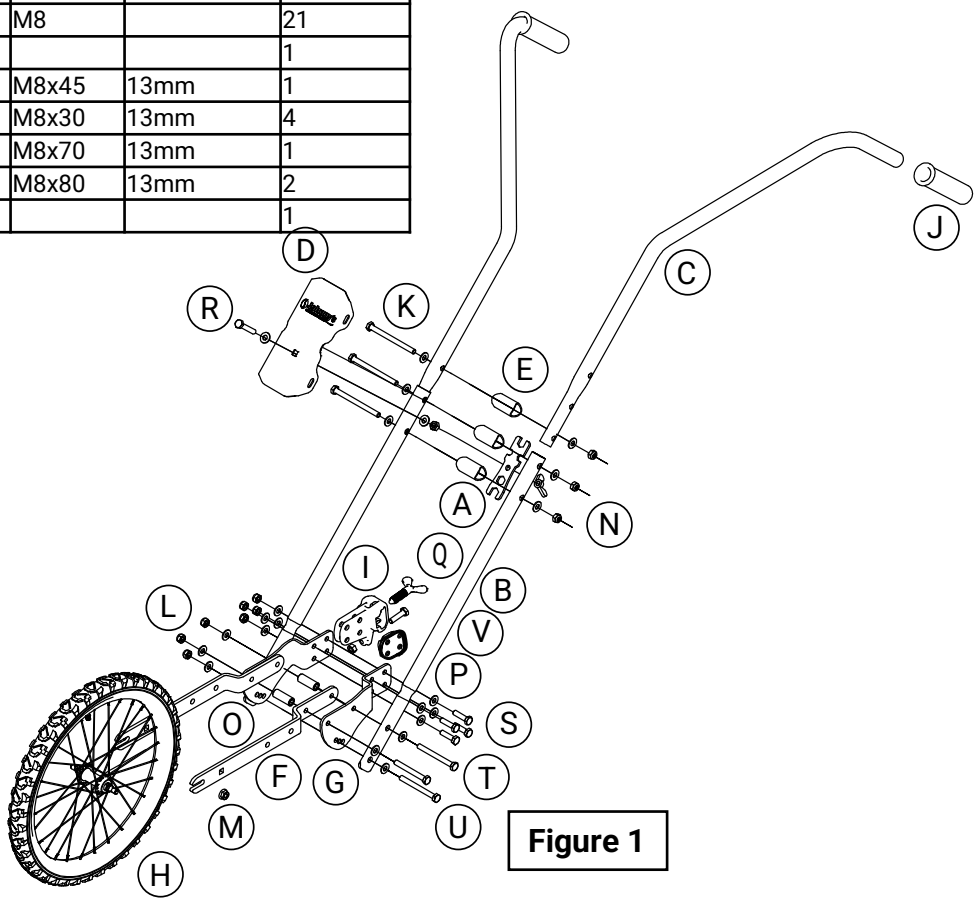

Figure 1

Copyright © 2026 Johnny's Selected Seeds. All rights reserved.

Tools Required:

- 13mm wrenches or sockets

NOTE: A multitool is included with the wheel hoe for tightening bolts in the field. It is best to use a wrench or socket set for assembly, however, to ensure the hardware is secure.

Assembly (See Figure 2 for steps 1-3):

1. Assemble the size M8x70 bolt (T) through the following: the forward hole of a Handle Attachment Bracket (G), a Wheel Support (F), a Wheel Support Spacer (O), the other Wheel Support, the other Handle Attachment Bracket, and a Washer (P). Lightly hand tighten an M8 Hex Lock Nut (L) onto the other end of the bolt.
2. Assemble a size M8x80 bolt (U) through the upper hole of a Lower Handle Bar (B), the back upper hole of a Handle Attachment Bracket (G), a Wheel Support (F), a wheel support spacer (O), the second Wheel Support, the second Handle Attachment Bracket, the second Lower Handle Bar and a Washer (P). Lightly hand tighten an M8 Hex Lock Nut (L) onto the other end of the bolt.
3. Assemble the other M8x80 bolt (U) through the following: the lower hole of a Lower Handle Bar (B), the lower hole of (2) Handle Attachment Brackets (G), the other Lower Handle Bar, and a Washer (P). Lightly hand tighten an M8 Hex Lock Nut (L) onto the other end of the bolt.

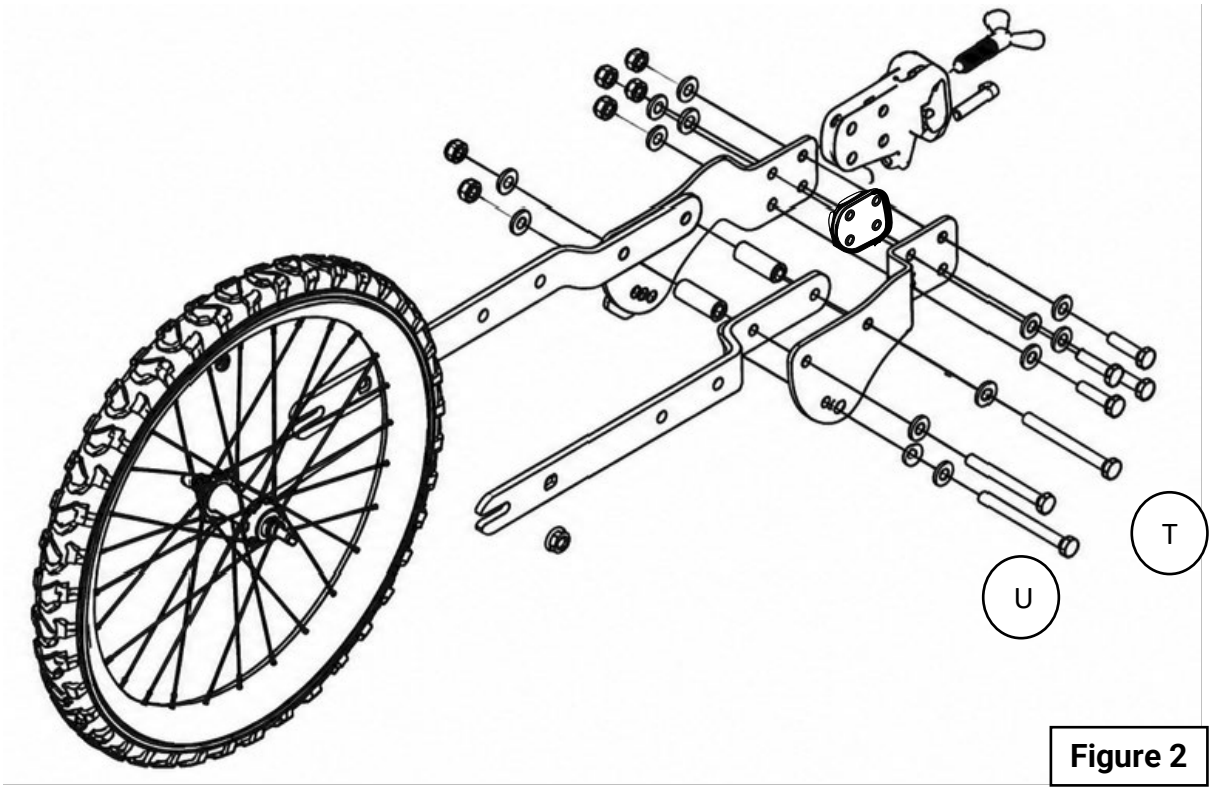

Figure 2

Copyright © 2026 Johnny's Selected Seeds. All rights reserved.

Assembly (continued):

4. Slide an Upper Handle Bar (C) into each Lower Handle Bar (B).
5. Assemble an M8x110 bolt (K) through the lowest hole of the Mid-Handle Bracket (D), a Lower Handle Bar (B), a Handle Spacer (E), and the other Lower Handle Bar. Add a Washer (P) and Hex Lock Nut (L) to the other side and lightly hand tighten. Repeat with two more M8x110 bolts (K) and Handle Spacers (E) and the Upper Handle Bars (C). See Figure 3.
6. Attach the Multitool Bolt Tightener (A) to the bottom of the Mid-Handle Bracket (D) using the Adjustment tool bolt (R) and the Adjustment Tool Wing Nut (N).
7. Slide the Rubber Handle Grips (J) onto each Upper Handle Bar (C).
8. Attach the Toolbar Holder (I) onto the Handle Attachment Brackets (G) using (4) size M8x30 bolts (S), (4) Washers (P), and (4) M8 Lock Nuts (L). The Toolbar Holder Plate (V) must be inserted between the flat tabs of the handle brackets (G). Lightly hand tighten the nuts. See Figure 4.
9. Thread the Butterfly Screw (Q) into the back of the Toolbar Holder (I).
10. Slide the axle of the Wheel (H) into the slots on the ends of the Wheel Supports (F). Lightly hand tighten two Wheel Nuts (M) onto the axle.
11. Fully tighten all fasteners using a set of 13mm box or socket wrenches. Figure 5 shows the assembled Johnny's Single Wheel Hoe.

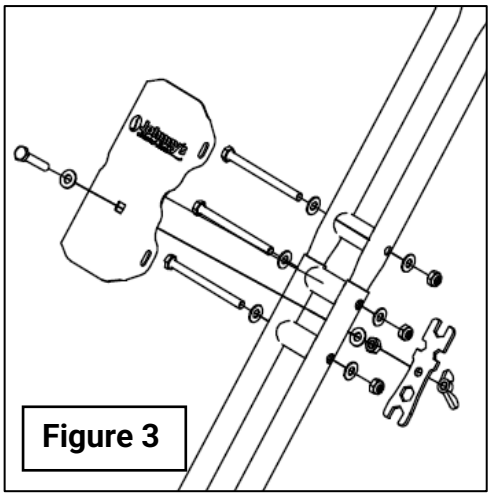

Figure 3

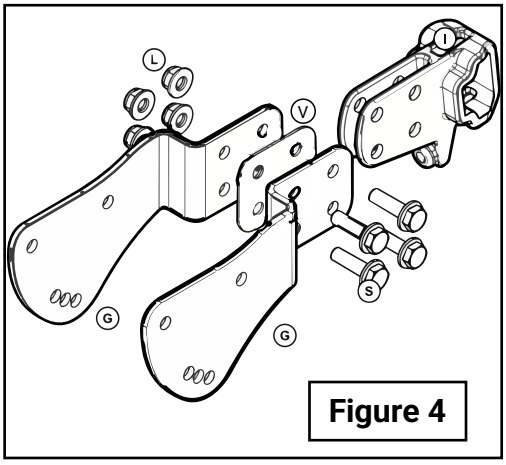

Figure 4



Figure 5

Copyright © 2026 Johnny's Selected Seeds. All rights reserved.

Mounting an Attachment

1. Johnny's Wheel Hoe is compatible with Terrateck Wheel Hoe attachments (sold separately). **NOTE:** Terrateck Finger Weeders and Secondary Tool Mounts are **not compatible** with Johnny's Wheel Hoe.
2. Slide your chosen attachment into the Toolbar Holder (I) and tighten the Butterfly Screw (Q).

Adjusting the Angle of the Attachment

1. Slide the attachment into the Toolbar Holder (I).
2. Lightly adjust the pressure from the Butterfly Screw (Q).
3. Tighten the M8x30 bolt with the multitool bolt tightener. Once you have achieved the desired angle, tighten the M8 nut to secure the tool in place. See Figure 6.

WARNING: the toolbar clamp should be used only to adjust the angle of the tool attachment and should not be over-tightened. Over tightening could damage the components.

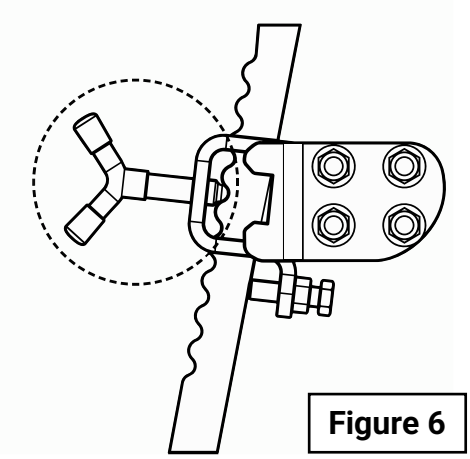

Figure 6

Adjusting Handle Height

1. Loosen the M8x30 bolts and M8 Lock Nuts in the bottom hole of the Lower Handle Bars (B).
2. Adjust the placement of the bolt according to the desired handle height.
3. Tighten bolts.

Instructions for Use

• Walk at a steady pace, operating your wheel hoe with a push-pull, oscillating motion.
• For best results, keep your attachment blades sharpened.

Converting to a Two-Wheel Hoe

The Johnny's Single Wheel Hoe can be converted to a double wheel hoe using the Double Wheel Conversion Kit (#6501), sold separately. Please see the assembly instructions included with that product.

Copyright © 2026 Johnny's Selected Seeds. All rights reserved.